DOUGLAS COUNTY
COLORADO

Staff Report Addendum

Date: January 2, 2026

To: Douglas County Planning Commission

From: Trevor Bedford, AICP, Senior Planner TB
Jeanette Bare, AICP, Planning Manager
Steven E. Koster, AICP, Assistant Director of Planning Services KC for SK

Subject: **7440 North US Highway 85**

Project File: **LE2025-027**

Planning Commission Hearing: **January 5, 2026 @ 6:00 p.m.**

The applicant has provided an updated narrative to clarify that the dimensions of the water tank are 63 feet in diameter and 24 feet in height with a capacity of approximately 560,000 gallons.

Additional referral responses have been received since the staff report was written and are attached to this addendum. The applicant will provide responses to comments prior to or at the Planning Commission Hearing.

ATTACHMENT **PAGE**

Updated Narrative 2
Referral Agency Response Report 6
Referral Letters 17

TECHNICAL MEMORANDUM

DOUGLAS COUNTY LOCATION AND EXTENT REPORT

RANGE METROPOLITAN DISTRICT
RANGED PLANNED DEVELOPMENT
WATER SUPPLY SYSTEM
US-85 & AIRPORT RD.

Prepared for:
Douglas County

Prepared by:
RICK Engineering

On Behalf of:
Range Metropolitan District

RICK Job No. 2215
December 2025

RICK

RICK

303-537-8020
rickengineering.com

8678 Concord Center Drive #200
Englewood, CO 80112

SAN DIEGO ORANGE RIVERSIDE SACRAMENTO SAN LUIS OBISPO SANTA CLARITA PHOENIX TUCSON LAS VEGAS DENVER

December 3, 2025

Planning Service Division
Douglas County
100 Third Street
Castle Rock, CO 80104

RE: Range Metropolitan District Range Planned Development Water Supply System

Dear Douglas County Planning Service Division:

Please accept this letter on behalf of the Range Metropolitan District for district infrastructure proposed to support the Range Planned Development. We are pleased to submit this Limits and Extents application for Range Filing No 1 for your approval, located at the intersection of US 85 and Airport Rd. within the approved Range Planned Development area in unincorporated Douglas County. This report will outline the upper and lower pump stations connected by a feed line that is proposed for this project.

Construction

Construction will include site preparation and grading for two pump stations and a water storage tank to established design elevations. Water utilities will be installed, including all associated piping, appurtenances, and a dedicated feed line between the lower and upper pump stations. Following utility installation, access drives will be constructed to provide maintenance and operational access to the facilities. Final site work will include installation of landscaping and site stabilization measures to restore disturbed areas and provide long-term erosion control.

Location & Appearance

The proposed lower water pump station will be situated approximately 1,000 feet east of the intersection of US 85 and Airport Road, located off the north entrance road. The building will measure approximately 20 feet in width by 17 feet in length. This will house the boost pumps which will send water through approximately 3,700 feet of feed line pipe to the upper pump station. The upper pump station and the associated water tank will be in the southeast corner of the Range Filing 1 clustered homes, approximately 2,900 feet east of US-85 and adjacent to the east property line. The pump house measures approximately 35 feet wide by 17 feet long and will contain the fire boost pumps. An emergency diesel generator will be just outside of the pump house and will provide power to the fire boost pumps in the event of an emergency. The water tank measures 63 feet in diameter and 24 feet in height. This will hold approximately 560,000 gallons. Both buildings will utilize fully cut-off exterior lighting to ensure illumination remains contained on-site, preventing light spillover onto adjacent properties. The buildings and the water tank will be finished in natural, subdued tones and screened with native trees to blend with the surrounding environment and enhance visual compatibility with nearby residences.

The water tank is being installed above ground to ensure optimal system performance and long-term reliability. Because the site is located on a hill above the adjacent housing development, burying the tank would significantly reduce the natural elevation advantage needed to achieve adequate pressure and would require a substantially larger fire pump to meet emergency flow standards. An underground installation would also complicate routine inspections and maintenance, limiting access to valves, fittings, and structural components and increasing the potential for undetected leaks or corrosion. While cost is a consideration, the primary drivers for an above-ground configuration are improved operational efficiency, better fire-response capability, and enhanced accessibility for safe maintenance over the life of the system.

Conformance with Douglas County Master Plan

Care has been taken to ensure the project aligns with the applicable goals of the Louviers Rural Community Master Plan. The design prioritizes conservation and integration of the site's natural features, with terrain disturbance minimized to maintain existing topography and preserve trees and shrubs wherever feasible. Building colors for the pump houses and the water tank have been selected to blend with the surrounding environment, and landscape screening will be incorporated to the greatest extent possible to further reduce visual impacts.

Stormwater

An onsite storm sewer system will convey runoff to one of five detention ponds which will provide water quality controls and then release it at historical rates along existing drainage ways. The Phase III Drainage Report and map have been included that show adequate drainage has been designed for the site.

Noise Control

Noise attenuation measures for the pumps and generator focus on minimizing operational sound levels at nearby residences while maintaining equipment performance. Because the selected pump house structure is wood framed rather than concrete, additional mitigation strategies will be implemented to compensate for its lower inherent sound attenuation. These measures include installing insulation and sound-dampening materials within the building envelope to reduce pump noise transmission, as well as orienting the ventilation system away from neighboring homes to limit exterior sound propagation.

The emergency generator located at the upper pump house will be housed in a dedicated enclosure outfitted with acoustic insulation, and, if required to meet target noise thresholds, sound-attenuated air intake and exhaust vents will be incorporated to further reduce noise emissions.

RICK

303-537-8020
rickengineering.com

8678 Concord Center Drive #200
Englewood, CO 80112

SAN DIEGO ORANGE RIVERSIDE SACRAMENTO SAN LUIS OBISPO SANTA CLARITA PHOENIX TUCSON LAS VEGAS DENVER

Traffic

Traffic associated with the pump houses is expected to be minimal and limited to periodic operational needs. The Range Metro District will make infrequent site visits for routine inspections, repairs, and landscape maintenance, resulting in only occasional vehicle access to the facilities. Due to the low frequency and short duration of these visits, traffic impacts on nearby residents are anticipated to be negligible and will not alter normal neighborhood traffic patterns or adversely affect residents' quality of life. The Range TIA has been included for reference purposes.

Paving Design

All pavement design for roadways and paved areas leading up to the pump houses is included as part of the Range Development Filing 1 submittal. The pump houses themselves will be served only by small access drives, the design and construction of which will be directed in the field by a qualified geotechnical engineer based on site-specific subsurface conditions and performance requirements.

Anticipated Process Timing

The Final Plat for Range Planned Development Filing 1 was placed in its first referral on December 9, 2025. We expect final permitting approvals in early 2026 with construction commencing shortly after county approvals. We anticipate Final Plat of Filing 2 to lag behind Filing 1 by approximately 6 months.

Thank you for your consideration of this pump house and water tank approval. We look forward to collaborating with Douglas County. Please do not hesitate to reach out with any questions or concerns you may have to help facilitate the approval process, and we look forward to your response.

Respectfully,

Troy Bales
tbales@rickengineering.com

Project Name: 7440 North US Highway 85
Project File #: LE2025-027
Date Sent: 12/16/2025 **Date Due:** 12/30/2025

Agency	Date Received	Agency Response	Response Resolution
Addressing Analyst	12/16/2025	Received: Proposed addresses are: 7518 N US HWY 85 - LOWER PUMP STATION 7508 N US HWY 85 - UPPER PUMP STATION These addresses are not to be used for any purpose other than for plan review until after this project is approved. Proposed addresses are subject to changes as necessary for 911 dispatch and life safety purposes. Addresses are recorded by Douglas County following all necessary approvals. Contact DCAddressing@douglas.co.us or 303.660.7411 with questions.	Information provided to applicant
AT&T Long Distance - ROW	12/17/2025	Received: This is in response to your eReferral with a utility map showing any buried AT&T Long Line Fiber Optics near 7440 N HWY 85 Sedalia, Colorado. The Earth map shows the project area in red and the buried AT&T Long Line/Core Fiber Optics in yellow. Based on the address and/or map you provided, there should be NO conflicts with the AT&T Long Line facilities.	No response necessary
Building Services	12/22/2025	Received: Permit is required for structures. Please visit Douglas County's web site for requirements and contact 303-660-7497 if you have any questions.	Information provided to applicant
CDPHE - All Referrals	12/22/2025	Received: See attached letter. Summary: Provided information regarding air quality regulations and fugitive dust pollution.	Information provided to applicant
CDPHE - Water Quality Control Division		No Response Received:	No response necessary
CenturyLink		No Response Received:	No response necessary

Project Name: 7440 North US Highway 85
Project File #: LE2025-027
Date Sent: 12/16/2025 **Date Due:** 12/30/2025

Agency	Date Received	Agency Response	Response Resolution
Chatfield Community Association		No Response Received:	No response necessary
Chatfield Watershed Authority		No Response Received:	No response necessary
Cherokee Ridge Estates HOA		No Response Received:	No response necessary
Colorado Department of Transportation CDOT-Region # 1	12/16/2025	Received: I have reviewed the referral for the L and E for construction of two pump stations and a water storage tank for the Range Metro District and have no objections. If any work will take place in the State Highway Right-of-Way a permit will be required. Application is made online at the following link: https://socgov.my.site.com/portal/s/login/?ec=302&startURL=%2Fportal%2Fs%2F	Information provided to applicant

Project Name: 7440 North US Highway 85
Project File #: LE2025-027
Date Sent: 12/16/2025 **Date Due:** 12/30/2025

Agency	Date Received	Agency Response	Response Resolution
Colorado Division of Water Resources	12/24/2025	Received: We have received your December 16, 2025 referral for Range Metropolitan District approval of a Location and Extent for the construction of two pump stations and a water storage tank. This referral does not appear to qualify as a "subdivision" as defined in section 30-28-101 (10)(a), C.R.S. Therefore, pursuant to the State Engineer's March 4, 2005 and March 11, 2011 memorandums to county planning directors, this office will only perform a cursory review of the referral information and provide informal comments. The comments do not address the adequacy of the water supply plan for this project or the ability of the water supply plan to satisfy any County regulations or requirements. In addition, the comments provided herein cannot be used to guarantee a viable water supply plan or infrastructure, the issuance of a well permit, or physical availability of water. Our office has no objections to the proposed construction of two pump stations and a water storage, since no changes to the water supply plan for the Range Development were proposed.	No response necessary
Comcast		No Response Received:	No response necessary

Project Name: 7440 North US Highway 85
Project File #: LE2025-027
Date Sent: 12/16/2025 **Date Due:** 12/30/2025

Agency	Date Received	Agency Response	Response Resolution
CORE Electric Cooperative	12/29/2025	Received: CORE Electric Cooperative has reviewed the materials included in the above-referenced referral response packet. Our review focused on existing CORE facilities, utility easements, electric loading, and overall service requirements for the proposed project. Based on this review, CORE offers the following comments and requests: CORE Electric Cooperative approves the Location and Extent for the project. Additional information is required. Due to the nature of this submittal, CORE requests that the applicant complete the enclosed Data Summary Sheet, which provides essential details regarding projected electrical loads and anticipated construction phasing. Please forward the attached Data Summary Sheet to the applicant and instruct them to return the completed form directly to me. The developer must provide information regarding: The maximum expected or allowable building square footage for each lot; and The anticipated type of business or occupancy for each lot. CORE understands that some of this information may be preliminary or based on best estimates; however, any details the applicant can provide will significantly assist us in ensuring that adequate electric facilities and capacity can be planned for and made available.	Comments provided to applicant
Dominion Water and Sanitation District		No Response Received:	No response necessary

Project Name: 7440 North US Highway 85
Project File #: LE2025-027
Date Sent: 12/16/2025 **Date Due:** 12/30/2025

Agency	Date Received	Agency Response	Response Resolution
Douglas County Health Department	12/30/2025	Received: See attached letter Summary: Provided information regarding stormwater runoff and mosquito control.	Information provided to applicant
Engineering Services	12/29/2025	Received: Overall the project appears to be in general conformance with Douglas County Engineering criteria. Detailed comments regarding site work for the pump and tank sites will be provided with Range Filing 1 final plat comments.	Information provided to applicant

Highlands Ranch Community Association	12/17/2025	Received: The Highlands Ranch Community Association appreciates the opportunity to review and comment on this L&E. As noted in §3 of our 12/10/2025 Letter to Mike Pesicka (Principal Planner, DougCO) regarding DougCo SB2025-036 (Range Flg 1, Final Plat), "HRCA notes that the Range water system includes a major water storage tank and pump station facilities located near the southeastern portion of the project. Given the proximity to HRCA land, HRCA requests that: • Architectural treatment and landscape screening be required to mitigate visual impacts. • Lighting for these facilities be dark-sky compliant and oriented to minimize spillover. • Sound attenuation be incorporated for pump and generator equipment. These measures are important to preserve the natural character of the adjacent Backcountry Wilderness Area." These concerns are not addressed in this L&E. For example, the above ground water storage tank located in the southeast corner of the Range property will stand approximately 30' above grade, and only approximately 37' from the shared property line. Additionally, the generator for the "upper pump station" in this location will also be located approximately 47' from the shared property line. The HRCA strongly encourages Douglas County to require the water storage tank be constructed below grade - like the multiple water storage tanks that serve Highlands Ranch - especially those close to the	Comments provided to applicant

Project Name: 7440 North US Highway 85
Project File #: LE2025-027
Date Sent: 12/16/2025 **Date Due:** 12/30/2025

Agency	Date Received	Agency Response	Response Resolution
		Backcountry Wildnerness Area, like this tank. This tank, placed on top of a manufactured high point, will not be aesthetically pleasing for either future residents of Range, or from the Backcountry Wilderness Area. A "residential grade muffler" for the generator should be required to ensure sound mitigation.	

Louviers Conservation Partnership	12/28/2025	Received: Louviers Conservation Partnership (LCP) has reviewed the documents for the 7440 North US Highway 85 Request by Range Metropolitan District for two water pump stations and a water storage tank and has comments following the document excepts below:: Below are excerpts from the documents reviewed of items important to the Town of Louviers including about Louviers and the current eastbound Airport Road level of Service (LOS). Conformance with Douglas County Master Plan Care has been taken to ensure the project aligns with the applicable goals of the Louviers Rural Community Master Plan. The design prioritizes conservation and integration of the site's natural features, with terrain disturbance minimized to maintain existing topography and preserve trees and shrubs wherever feasible. Building colors for the pump houses and the water tank have been selected to blend with the surrounding environment, and landscape screening will be incorporated to the greatest extent possible to further reduce visual impacts. Felsburg Holt & Ullevig Range 5th Revised Traffic Impact Analysis The Town of Louviers is to the northwest of US 85 and the project site. It is a relatively small enclave of residential homes that was originally constructed as a company town to support the E.I. du Pont de Nemours dynamite manufacturing facilities and it is one of the best preserved company towns in Colorado.	Comments provided to applicant

		The evaluation of an intersection controlled by a traffic signal provides average vehicle delay and LOS information for the entire intersection, as well as for individual movements. Figure 3 also shows the LOS results for existing conditions which finds that the US 85/Airport Road intersection is currently operating at LOS B during the AM and PM peak hours. Given the relatively high traffic demand on US 85, however, eastbound movements on Airport Road are currently experiencing LOS E during the AM peak hour and LOS F during the PM peak hour. Of note, the operational analyses are based on signal timing data provided by CDOT and it is understood that this intersection operates in a "free" mode which allows the traffic signal to fluctuate to meet vehicle movement demand without a specified cycle length. As such, the traffic signal controller appears to allocate more "green time" to movements along US 85, which, in turn, creates a higher level of delay for the eastbound Airport Road movements that result in the poor eastbound LOS. Projected vehicle-trips for Range is almost 5,000 vehicles per day with approximately 400 during the AM peak hour and about 525 during the PM peak hour. Although this is just location and extents for 2 pump stations and a water storage tank which would only have an impact when being built, it does include a full traffic study which mentions eastbound movements on Airport Road are currently experiencing LOS E during the AM peak hour and LOS F during	

Agency	Date Received	Agency Response	Response Resolution
		the PM peak hour. This study used existing traffic data from 2020 which will not include the approved Brannan Asphalt Plant which has not started operating yet in addition to the approved Brannan crushing and existing Brannan concrete plant for a total of 1008 truck trips per day and also the added traffic from the recently approved Zebulon Mega Sports Complex where they are now requesting a change to add more residential units. Randy Johnson Director Louviers Conservation Partnership	
Mile High Flood District		No Response Received:	No response necessary
Office of Emergency Management	12/18/2025	No Comment:	No response necessary
Rural Water Authority of Douglas County		No Response Received:	No response necessary
Sheriff's Office		No Response Received:	No response necessary
Sheriff's Office E911		No Response Received:	No response necessary

Project Name: 7440 North US Highway 85
Project File #: LE2025-027
Date Sent: 12/16/2025 **Date Due:** 12/30/2025

Agency	Date Received	Agency Response	Response Resolution
South Metro Fire Rescue	12/23/2025	Received: South Metro Fire Rescue (SMFR) has reviewed the provided documents and has conditional non-objection to the proposed Location and Extent. Applicants and Contractors are encouraged to contact SMFR regarding the applicable permit requirements for the proposed project. COMMENTS: 1. Referrals for new structures must not use unapproved addresses as the project name. These facilities will be addressed from future roadways and will not be addressed from US Hwy 85, Addresses proposed by the Addressing Analyst (which does not match the project title) will also change. Building addresses and unit numbers shall be coordinated with and approved by SMFR and the Douglas County Addressing Analyst prior to submitting for construction permits.	Comment provided to applicant
Wildfire Mitigation		No Response Received:	No response necessary
Xcel Energy-Right of Way & Permits	12/19/2025	Received: Public Service Company of Colorado's (PSCo) Right of Way & Permits Referral Desk has reviewed the above-mentioned application and currently has no apparent conflict. As a safety precaution, PSCo would like to remind the developer to call the Utility Notification Center by dialing 811 for utility locates prior to construction.	Information provided to applicant

REFERRAL RESPONSE REQUEST – LOCATION AND EXTENT

Date sent: December 16, 2025 Comments due by: **December 30, 2025**

Project Name:	7440 North US Highway 85– Location and Extent
Project File #:	LE2025-027
Project Summary:	Range Metropolitan District requests approval of a Location and Extent for the construction of two pump stations and a water storage tank.

Information on the identified development proposal located in Douglas County is enclosed. Please review and comment in the space provided.

☐	No Comment
☒	Please be advised of the following concerns: Overall, the project appears to be in general conformance with Douglas County Engineering criteria. Detailed comments regarding site work for the pump and tank sites will be provided with Range Filing 1 final plat comments.
☐	See letter attached for detail.

Agency:	Douglas County Public Works	**Phone #:**	303-660-7490
Your Name:	Ken Murphy, P.E.	**Your Signature:**	Ken Murphy
(please print)		**Date:**	29 DEC 2025

A public hearing on this request will be held before the Douglas County Planning Commission on **Monday, January 5, 2026, at 6:00 pm**. ***This public hearing will be held on-line and in person. See the County website or contact the Planning Department for more information.***

Sincerely,

Trevor Bedford, AICP, Senior Planner

Trevor Bedford
Douglas County Planning Services
100 Third Street Castle Rock, CO 80104

VIA EMAIL
RE: Douglas County eReferral (Project Number LE2025-027) Is Ready For Review

Dear Trevor Bedford,

The Colorado Department of Public Health and Environment's Air Pollution Control Division (APCD or Division) received a request for an air quality administrative review concerning the proposed pump and water tank project as described in your correspondence dated December 16, 2025. The Division has reviewed the project letter and respectfully offers the following comments. Please note that the following Air Quality Control Commission (AQCC) regulations may not be inclusive of the regulations the proposed project will be subject to. It is the responsibility of the involved parties to determine what regulations they are subject to and follow them accordingly.

Land Development
We also note that projects similar to this proposal often involve land development. Under Colorado air quality regulations, land development refers to all land clearing activities, including but not limited to land preparation such as excavating or grading, for residential, commercial or industrial development. Land development activities release fugitive dust, a pollutant regulation by the Division. Small land development activities are not subject to the same reporting and permitting requirements as large land activities. Specifically, land development activities that are less than 25 contiguous acres and less than 6 months in duration do not need to report air emissions to the Division. It is important to note that even if a permit is not required, fugitive dust control measures including the Land Development APEN Form APCD-223 must be followed at the site. Fugitive dust control techniques commonly included in the plan are included in the table below.

Control Options for Unpaved Roadways	
Watering	Use of chemical stabilizer
Paving	Controlling vehicle speed
Graveling	
Control Options for Mud and Dirt Carry-Out Onto Paved Surfaces	
Gravel entry ways	Washing vehicle wheels
Covering the load	Not overfilling trucks
Control Options for Disturbed Areas	
Watering	Application of a chemical stabilizer
Revegetation	Controlling vehicle speed
Compaction	Furrowing the soil
Wind Breaks	Minimizing the areas of disturbance
	Synthetic or Natural Cover for Slopes

Please refer to the website https://cdphe.colorado.gov/apens-and-air-permits for information on land use APENs and permit forms. Click on “Land Development” to access the land development specific APEN form. Please contact KC Houlden, Construction Permits Unit Supervisor, at 303-691-4092, kenneth.houlden@state.co.us if you have any specific questions about APENs and permit forms.

If you have any other questions or need additional information, please use the contact info listed above, or e-mail or call me directly. Thank you for contacting the Air Pollution Control Division about your project.

Sincerely,
Brendan Cicione
Air Quality and Transportation Planner
General SIP Unit
Air Pollution Control Division
Colorado Department of Public Health and Environment
303-691-4104 // brendan.cicione@state.co.us

DOUGLAS COUNTY
HEALTH DEPARTMENT COLORADO

December 29, 2025

Trevor Bedford
Planning Services
100 Third Street
Castle Rock, CO 80104

RE: LE2025-027

Dear Trevor Bedford,

Thank you for the opportunity to review and comment on the referenced approval request of a Location and Extent for the construction of two pump stations and a water storage tank application submitted by Range Metropolitan District. Douglas County Health Department (DCHD) staff have reviewed the application for compliance with pertinent environmental and public health regulations. After reviewing the application, DCHD has the following comment(s):

Stormwater Impacts on Nearby Waterway
Development of the subject parcel will potentially result in an increase of stormwater and snowmelt runoff that may contribute significant pollutant loadings to the Daniels Park drainage, a tributary to Plum Creek. These pollutants include bacteria, nutrients, metals, and oxygen consuming contaminants. *A Phase III Drainage Report for Range Filing 1 has been submitted.*

Mosquito Control - Stormwater Facilities
The site plan indicates that five full-spectrum detention ponds are proposed. Detention ponds can become sites for mosquito breeding. To reduce the potential for human exposures to West Nile and other mosquito-borne viruses, DCHD recommends that the applicant prepare a mosquito control plan. Elements of the plan should include proper design, construction and regular inspection and maintenance of stormwater quality facilities, and larviciding if mosquito larvae become a problem.

Please feel free to contact me at 720-907-4887 or KHochstetler@douglas.co.us if you have any questions about our comments.

Sincerely,

Kristin Hochstetler
Environmental Health Specialist
Douglas County Health Department

Trevor Bedford

From: Loeffler - CDOT, Steven <steven.loeffler@state.co.us>
Sent: Tuesday, December 16, 2025 2:58 PM
To: Trevor Bedford
Cc: Jessica Varner - CDOT; Joseph Tripple - CDOT
Subject: Re: Douglas County eReferral (Project Number LE2025-027) Is Ready For Review

> **Caution:** This email originated outside the organization. Be cautious with links and attachments.

Trevor,

I have reviewed the referral for the L and E for construction of two pump stations and a water storage tank for the Range Metro District and have no objections. If any work will take place in the State Highway Right-of-Way a permit will be required. Application is made online at the following link: https://socgov.my.site.com/portal/s/login/?ec=302&startURL=%2Fportal%2Fs%2F

Thank you for the opportunity to review this referral.

Steve Loeffler
Permits Unit- Region 1

P 303.757.9891 | F 303.757.9053
2829 W. Howard Pl. 2nd Floor, Denver, CO 80204
steven.loeffler@state.co.us | www.codot.gov | www.cotrip.org

On Tue, Dec 16, 2025 at 11:29 AM <tbedford@douglas.co.us> wrote:

> There is an eReferral for your review. Please use the following link to log on to your account:
> https://urldefense.com/v3/__https://apps.douglas.co.us/planning/projects/Login.aspx__;!!PUG2raq7KiCZwBk!eD8BOdbfe29ir2cjwvGNRSsLcqg6I8fCXBFb3ee8FMdmUf4TnN9WmN6zn7QsiSg4ocEoRA5iIpdl2YR1KONHlpQgp_uw$
>
> Project number LE2025-027, 7440 North US Highway 85.
>
> Range Metropolitan District requests approval of a Location and Extent for the construction of two pump stations and a water storage tank.
>
> This referral will close on Tuesday, December 30, 2025.
>
> If you have any questions, please contact me.

Sincerely,

Trevor Bedford, AICP
Planning Services
100 Third Street
Castle Rock, CO 80104
303-660-7460 (main)

PROJECT REFERRAL LOADING AND DATA SUMMARY SHEET

Dear Applicant:

Please complete the following summary sheet and return to:

Sean Atkinson
CORE Electric Cooperative
5496 North U.S. Highway 85
P.O. Drawer A
Sedalia, Colorado 80135
satkinson@core.coop

Project Name _____

Residential Developments:

1. Total number of homes or units in development _____
2. Lot breakdown of construction phases:

Phase	Filing(s)	Block(s)	Lot(s)	Construction Date (Month/Year)

3. Electrical loads of homes or units:
   - Typical size of home or unit _____ (sq. ft.)
   - Typical size of electrical service _____ (amps)
   - Number of homes or units designed or built with A/C _____
4. Other electrical loads (Examples: schools, wells, booster pumps, water treatment facilities, clubhouses, or golf courses):

   _____

   _____

Commercial Developments:

1. Extent of commercial development:

Lot/Block	Lot Size (sq. ft.)	Building Size (sq. ft.)	Type of Business (i.e. retail, office, industrial, restaurant)	Construction Date (Month/Year)

2. Type of electrical service: ☐ 1Ø, 120/240 V ☐ 3Ø, 120/208 V ☐ 3Ø, 277/480V
3. Estimated kW demand of load(s) if known:

   _____

   _____
4. Other electrical loads (Examples: wells, booster pumps, or water treatment facilities):

   _____

   _____

Project contact:

Name _____ Phone _____
Company _____
Address _____
_____

Thank you for completing the above information. If you have any questions, please contact me at (720) 733-5480.

Sean Atkinson
System Planner

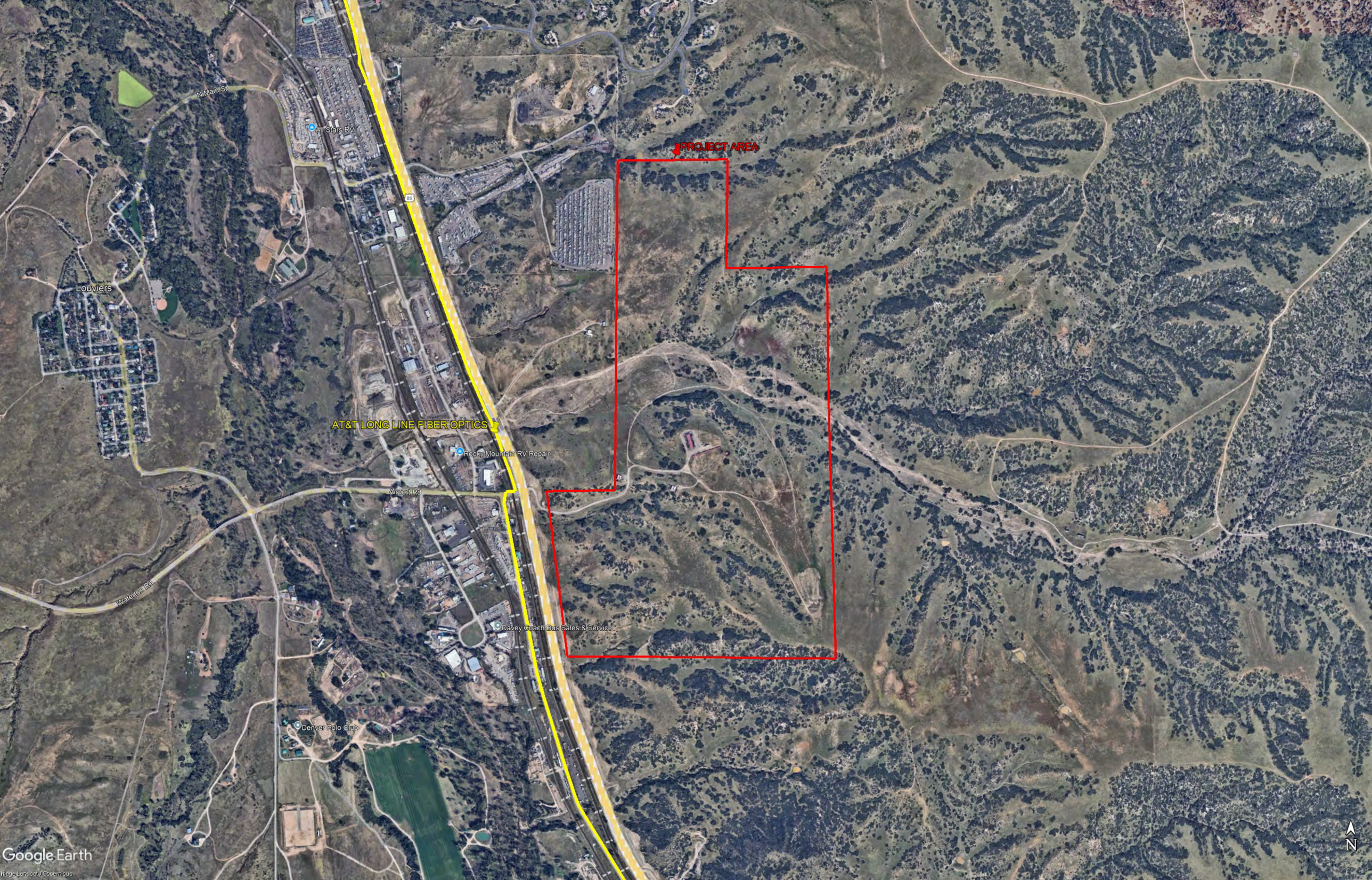
PROJECT AREA
N Main St
AllStars RV
Louviers
AT&T LONG LINE FIBER OPTICS
Rocky Mountain RV Repair
Airport Rd
Waterton Rd
Davey Coach Bus Sales & Service
Denver Polo Club
Google Earth
Image Landsat / Copernicus
N

HIGHLANDS RANCH
COMMUNITY ASSOCIATION

Wednesday - December 10, 2025

Sent Via: Email to: mpesicka@douglas.co.us

Mr. Mike Pesicka, Principal Planner
Douglas County, ComDev Dpt: PLANNING
100 Third Street
Castle Rock, CO 80104-2425

RE: **DougCo SB2025-036: Range Filing 1, Final Plat**

HRCA Comments and Concerns

Greetings, Mr. Pesicka:

The Highlands Ranch Community Association (HRCA) appreciates the opportunity to review and opine on the Final Plat submittal for Range Filing No. 1. As you know, HRCA owns and manages the Backcountry Wilderness Area, which directly abuts the eastern and northeastern boundary of the Range property, and therefore has a significant interest in the long-term interface between this development and protected open space.

After reviewing the Final Plat documents and supporting technical materials, HRCA acknowledges that Filing No. 1 appears to be generally consistent with the previously approved Planned Development and Preliminary Plan, and that utility systems, drainage facilities, and roadway infrastructure are designed to be contained within the Range project and the associated metropolitan districts.

Accordingly, HRCA offers conditional support for Final Plat Filing No. 1, subject to the following concerns and expectations being formally recognized and addressed through future filings, site improvement plans, and associated approvals.

HRCA Conditions and Preserved Objections

1. *Boundary Treatment, Fencing, and Trespass Prevention*

   HRCA previously raised concerns during Preliminary Plan review regarding boundary treatments, fencing, and trespass management along the shared interface between Range and the Backcountry Wilderness Area. Those concerns remain unresolved at this stage.

   HRCA requests that future filings explicitly include:

   - Permanent fencing or physical boundary controls where residential lots or trails abut HRCA land.
   - Signage identifying the boundary between private/community property and protected open space.
   - Design measures that prevent informal access into HRCA property from Range neighborhoods.

Education and wayfinding, while beneficial, do not replace physical boundary measures where development directly interfaces with conservation land.

2. *Trail Design and Connectivity*

HRCA requests that trail systems be designed to:

- Avoid directing users toward HRCA land unless an access agreement exists.
- Prevent trail terminations that encourage informal use or "social trails" into the Backcountry.
- Acknowledge HRCA property as a restricted, managed open space rather than general recreation land.

Any future trail planning near the HRCA boundary shall be coordinated with HRCA prior to approval.

3. *Infrastructure Siting: Water Storage Tank and Pump Stations*

HRCA notes that the Range water system includes a major water storage tank and pump station facilities located near the southeastern portion of the project.

Given the proximity to HRCA land, HRCA requests that:

- Architectural treatment and landscape screening be required to mitigate visual impacts.
- Lighting for these facilities be dark-sky compliant and oriented to minimize spillover.
- Sound attenuation be incorporated for pump and generator equipment.

These measures are important to preserve the natural character of the adjacent Backcountry Wilderness Area.

4. *Weed Control and Edge Management*

HRCA requests that the Final Plat and associated agreements clearly establish responsibility for:

- Ongoing weed control along the shared boundary.
- Native revegetation and restoration in areas disturbed adjacent to HRCA property.
- Prevention of invasive species transport into protected open space.

Control programs should be formalized in operating agreements, not left to informal management practices.

5. *Future Filings and Record Preservation*

HRCA expects that the matters outlined above be addressed in detail in:

- Filing No. 2.
- Any future Site Improvement Plans (SIPs).
- Utility facility approvals.
- Trail infrastructure submittals.

HRCA submits this letter to ensure these issues are documented in the land-use record and preserved for future review.

In summary, HRCA does not oppose Final Plat Filing No. 1 as a technical matter. However, HRCA's support is expressly conditioned on the expectation that boundary treatment, trail design, and infrastructure impacts are addressed in future approvals in a manner that protects HRCA-owned conservation lands.

Nothing in this letter shall be construed as a waiver of HRCA's ability to comment on or object to future filings, permits, or approvals related to the Range development that affect HRCA land or operational interests.

Please include this letter in the official project file. HRCA appreciates the opportunity to remain engaged in this process and welcomes continued coordination with Douglas County and the applicant as future submittals occur.

Sincerely,

HIGHLANDS RANCH COMMUNITY ASSOCIATION
Community Improvement Services

Weylan A. "Woody" Bryant, M LS, PE
Director: Community Improvement Services
303.471.8802 (direct) | 303.471.8821 (general office) | 303.549.0053 (cell)
Woody.Bryant@hrcaonline.org (email) | commercialreview@hrcaonline.org (alternate email)

Attachments: As noted, if applicable.

Cc: Mr. Mike Bailey, GM/CEO HRCA via: mike.bailey@hrcaonline.org
Mr. John Mezger, HRCA via: john.mezger@hrcaonline.org

HELP CONSERVE OUR NATURAL RESOURCES!

SOUTH METRO FIRE RESCUE
FIRE MARSHAL'S OFFICE

Trevor Bedford, AICP, Project Planner
Douglas County Department of Community Development, Planning Services
100 Third St
Castle Rock Co 80104
303.660.7460
303.660.9550 Fax

Project Name: 7440 North US Highway 85 – Location and Extent
Project File #: **LE2025-027**
S Metro Review # REFSP25-00312

Review date: December 23, 2025

Plan reviewer: Aaron Miller
720.989.2246
aaron.miller@southmetro.org

Project Summary: Range Metropolitan District requests approval of a Location and Extent for the construction of two pump stations and a water storage tank

Code Reference: Douglas County Fire Code, 2018 International Fire Code, and 2021 International Building Code with amendments as adopted by Douglas County.

South Metro Fire Rescue (SMFR) has reviewed the provided documents and has conditional non-objection to the proposed Location and Extent. Applicants and Contractors are encouraged to contact SMFR regarding the applicable permit requirements for the proposed project.

COMMENTS:

1. **Referrals for new structures must not use unapproved addresses as the project name.** These facilities will be addressed from future roadways and will not be addressed from US Hwy 85, Addresses proposed by the Addressing Analyst (which does not match the project title) will also change. Building addresses and unit numbers shall be coordinated with and approved by SMFR and the Douglas County Addressing Analyst prior to submitting for construction permits.

Fire Flow per Appendix B

Construction Type	Building Area (SF)	Fire Flow (GPM)	Sprinkler System (Type)	Reduced Fire Flow

SOUTH METRO FIRE RESCUE
FIRE MARSHAL'S OFFICE

FIRE ACCESS ROAD DESIGN CRITERIA

BUILDING exterior walls (and any portion thereof) of any buildings that are more than 150 feet from the curb line of a public street shall be served by a Fire Apparatus Access Road which shall be unobstructed. This distance is measured by an approved route around the exterior of the building or facility. Additional allowances may be made for some sprinkler protected structures. Alternate access arrangements may be accepted based on site conditions and building fire protection features.

Due to the possibility of heavy vehicle traffic, residential and commercial collector and arterial roads may not be considered adequate for fire suppression operations; no credit for access to perimeter of buildings shall be given from collectors or arterials, unless specifically approved.

Sites not be capable of meeting these requirements and any alternative means must be evaluated and approved by the Fire Marshal.

FIRE APPARATUS ACCESS ROADS shall be of an all-weather surface capable of supporting the imposed loads of fire apparatus. Maximum grade on site shall not exceed six percent (6%). Roads shall be asphalt or concrete. Other surfaces may be accepted on a case by case basis.

The minimum unobstructed width of the fire apparatus access road shall be 20 feet. In order to maintain the minimum width and prevent obstructions such as parking of vehicles fire lane signs shall be installed in an approved manner. A minimum vertical clearance of 13 feet, 6 inches shall be maintained for the entire required width of the access road.

Any dead-end access road over 150 feet long shall be provided with an approved turnaround that may be a circle, tee, hammerhead, or other functional approved design.

9195 East Mineral Avenue, Centennial, Colorado 80112 Phone: 720-989-2230 Fax: 720-989-2030

SOUTH METRO FIRE RESCUE
FIRE MARSHAL'S OFFICE

VEHICLE SPECIFICATIONS are provided for the largest apparatus in use by South Metro Fire Rescue. Fire Apparatus Access Roads shall be capable of accommodating this apparatus.

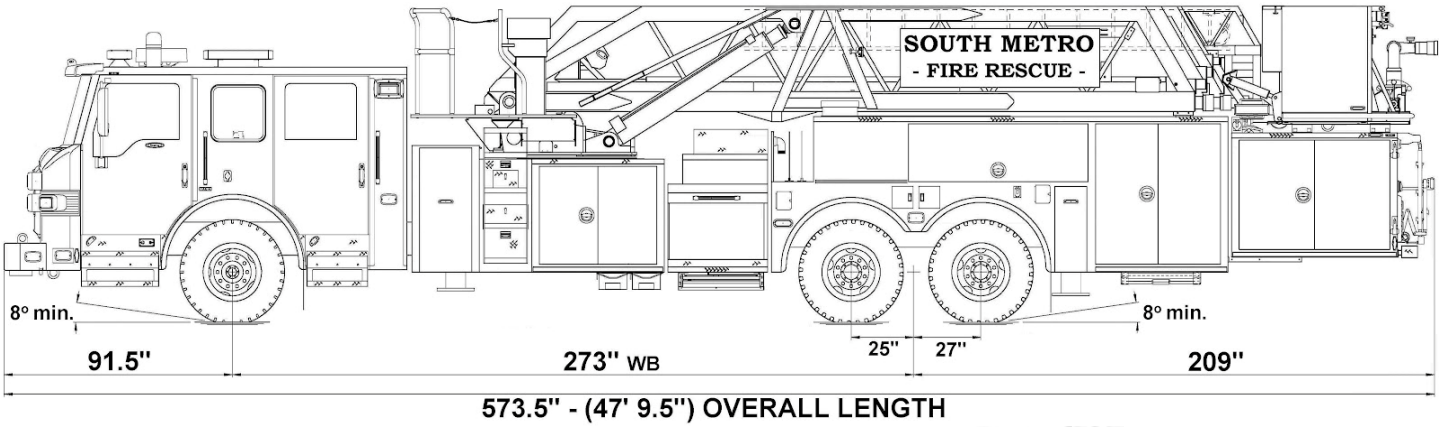

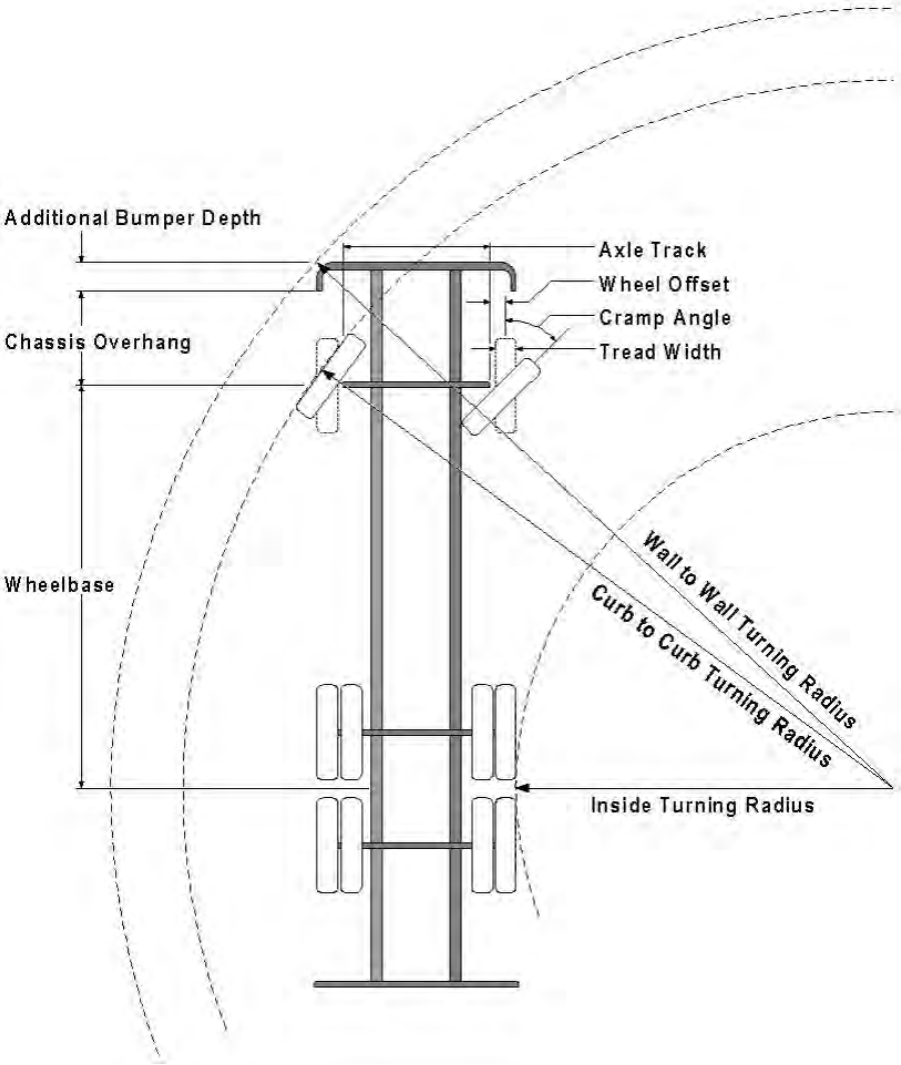

9195 East Mineral Avenue, Centennial, Colorado 80112 Phone: 720-989-2230 Fax: 720-989-2030

Vehicle Specifications

Length: 47' 9.5"

Width: 8' 5" - (10' 1" mirror to mirror)

Height: 10' 9"

Wheelbase: 273 in.

Design load: 80,000 pounds

Inside Cramp Angle: 40°

Axle Track: 83"

Wheel Offset: 5.3"

Tread Width: 13.5"

Turning Radii:

Inside Turn: 26 ft. 1 in.

Curb to curb: 41 ft. 11 in.

Wall to wall: 46 ft. 8 in.

Where objects are present adjacent to the fire apparatus access road, particularly on turns and turn arounds which require backing, a reasonable safety margin shall be provided to prevent potential damage to the property and to the fire apparatus.

PRIVATE ROADS that provide access to more than two dwellings or one or more commercial buildings shall be constructed to meet the roadway standards approved by the South Metro Fire Rescue Authority for fire apparatus access. Private roads that do not meet the roadway standard may be accepted provided that alternative methods and materials are incorporated into the subdivision that address the fire and life safety of the citizens.

Outlook

Louviers Conservation Partnership Range Location and Extent (LE2025-027) Comments

From Randy Johnson <rj2376@outlook.com>
Date Sun 12/28/2025 8:39 PM
To tbedford@douglas.co.us <tbedford@douglas.co.us>

Louviers Conservation Partnership (LCP) has reviewed the documents for the 7440 North US Highway 85 Request by Range Metropolitan District for two water pump stations and a water storage tank and has comments following the document excepts below::

Below are excerpts from the documents reviewed, noting in Bold items important to the Town of Louviers including about Louviers and the current eastbound Airport Road level of Service (LOS) highlighted in bold.

Conformance with Douglas County Master Plan
Care has been taken to ensure the project aligns with the applicable goals of the Louviers Rural Community Master Plan. **The design prioritizes conservation and integration of the site's natural features, with terrain disturbance minimized to maintain existing topography and preserve trees and shrubs wherever feasible. Building colors for the pump houses and the water tank have been selected to blend with the surrounding environment, and landscape screening will be incorporated to the greatest extent possible to further reduce visual impacts.**

Felsburg Holt & Ullevig Range 5th Revised Traffic Impact Analysis
The Town of Louviers is to the northwest of US 85 and the project site. It is a relatively small enclave of residential homes that was originally constructed as a company town to support the E.I. du Pont de Nemours dynamite manufacturing facilities and it **is one of the best preserved company towns in Colorado.**

The evaluation of an intersection controlled by a traffic signal provides average vehicle delay and LOS information for the entire intersection, as well as for individual movements. Figure 3 also shows the LOS results for existing conditions which finds that the US 85/Airport Road intersection is currently operating at LOS B during the AM and PM peak hours. **Given the relatively high traffic demand on US 85, however, eastbound movements on Airport Road are currently experiencing LOS E during the AM peak hour and LOS F during the PM peak hour.**

Of note, the operational analyses are based on signal timing data provided by CDOT and it is understood that this intersection operates in a "free" mode which allows the traffic signal to fluctuate to meet vehicle movement demand without a specified cycle length. As such, the traffic signal controller appears to allocate more "green time" to movements along US 85, which, in turn, **creates a higher level of delay for the eastbound Airport Road movements that result in the poor eastbound LOS.**

Projected vehicle-trips for Range is almost 5,000 vehicles per day with approximately 400 during the AM peak hour and about 525 during the PM peak hour.

Although this is just location and extents for 2 pump stations and a water storage tank which would only have an impact when being built, it does include a full traffic study which mentions **eastbound movements on Airport Road are currently experiencing LOS E during the AM peak hour and LOS F during the PM peak hour.** This study used existing traffic data from 2020 which will not include the approved Brannan Asphalt Plant which has not started operating yet in addition to the approved Brannan crushing and existing Brannan concrete plant for a total of 1008 truck trips per day and also the added traffic from the recently approved Zebulon Mega Sports Complex where they are now requesting a change to add more residential units.

Randy Johnson
Director
Louviers Conservation Partnership

Right of Way & Permits

1123 West 3rd Avenue
Denver, Colorado 80223
Telephone: 303.285.6612
violeta.ciocanu@xcelenergy.com

December 19, 2025

Douglas County Planning Services
100 Third Street
Castle Rock, CO 80104

Attn: Trevor Bedford

Re: 7440 North US Highway 85, Case # LE2025-027

Public Service Company of Colorado's (PSCo) Right of Way & Permits Referral Desk has reviewed the above-mentioned application and currently has **no apparent conflict**.

As a safety precaution, PSCo would like to remind the developer to call the Utility Notification Center by dialing 811 for utility locates prior to construction.

Violeta Ciocanu (Chokanu)
Right of Way and Permits
Public Service Company of Colorado dba Xcel Energy
Office: 303-285-6612 – Email: violeta.ciocanu@xcelenergy.com